Force Engineering & Testing
19530 Ramblewood Drive
Humble, Texas 77338
Office: (281) 540-6603 Test Lab: (832) 720-4251
www.forceengineeringtesting.com

Product Evaluation Report

E.F. BAVIS & ASSOCIATES, INC.

10' Fixed Trimless Window with Center Mullion

Florida Product Approval # 6587.8 R9

Florida Building Code 2026
Per Rule 61G20-3
Method: 1 –D

Category: Windows
Subcategory: Fixed
Compliance Method: 61G20-3.005(1)(d)
HVHZ

Product Manufacturer:
E.F. Bavis & Associates, Inc.
201 Grandin Road
Maineville, Ohio 45039

Engineer Evaluator:
Johnathan Green, P.E. #88223
Florida Evaluation ANE ID: 12901

Contents:

Evaluation Report: Page 1 - 3
Installation Detail: Page 4 - 23

JOHNATHAN GREEN
LICENSE
No. 88223
STATE OF
FLORIDA
PROFESSIONAL ENGINEER

AUGUST 25, 2026

THIS DOCUMENT HAS BEEN DIGITALLY SIGNED AND SEALED BY JOHNATHAN GREEN ON THE DATE ADJACENT TO THE SEAL.

PRINTED COPIES OF THIS DOCUMENT ARE NOT CONSIDERED SIGNED AND SEALED AND THE SIGNATURE MUST BE VERIFIED ON ANY ELECTRONIC COPIES.

Force Engineering & Testing
19530 Ramblewood Drive
Humble, Texas 77338
Office: (281) 540-6603 Test Lab: (832) 720-4251
www.forceengineeringtesting.com

Compliance Statement:	The product as described in this report has demonstrated compliance with the Florida Building Code 2026 including High Velocity Hurricane Zone.
Product Description:	10' Fixed Trimless Window with Center Mullion Model #12103997.
Window Frame Size:	9'-3 ½" wide x 2'-8 ¾" high x 6 ¾" deep
Window Frame:	Material: 14 Ga. ASTM A653 Grade 50, Galvannealed A60 Frame Coating: Nominal 3 mils Powder Coat
Window Center Mullion:	Three piece, 11 Ga. & 14 Ga. steel and aluminum stop bar.
Glazing:	1 ¼" (nominal) thick bullet resistant glass. The glass consists of 3/32" annealed on interior face, 3/8" annealed, ½" annealed and ¼" annealed on the exterior side. A layer of 0.030" Kuraray Trosifol PVB is placed between each layer of glass.
Glazing Interlayer:	Kuraray America, Inc. 0.030" Kuraray Trosifol PVB Interlayer Miami Dade NOA NO: 26-0625.05
Window Frame Anchorage:	Header: Eight fasteners equally spaced, 7 ¼" from each end then 13 7/8" O.C. Sill: Eight fasteners located in pairs of two at 2" apart, 7" and 46 7/8" from each end. Jamb: Three fasteners located 6", 17 ¼" and 28 ½" from bottom of frame for each jamb. All fasteners shall be Corrosion Resistance: Per Florida Building Code 2026 and Section 1711 for installations within 3000 ft. of a saltwater coastline.
Substrate:	Minimum 14 Ga. Stud framed opening or Minimum Grout filled C90 Concrete Block Nominal 8" or Minimum No 2 S.P.F. Wood frame Substrate must be designed in accordance w/ Florida Building Code 2026.
Anchor Edge Distance:	Minimum ¾" edge distance for 14 Ga. steel framing Minimum 3" edge distance for Grout filled C90 Concrete Block Nominal 8" Minimum 1 ¼" edge distance for No 2 S.P.F. Wood frame
Design Wind Pressures:	**+ / - 75.0 psf**

Force Engineering & Testing
19530 Ramblewood Drive
Humble, Texas 77338
Office: (281) 540-6603 Test Lab: (832) 720-4251
www.forceengineeringtesting.com

Performance Standards:

The product described herein has demonstrated compliance with:

- TAS 201-94: Large Missile Impact Test.
- TAS 202-94: Criteria for Testing Impact and Non-Impact Resistance Building Envelope Components Using Static Air Pressure.
- TAS 203-94: Criteria for Testing Products Subject to Cyclic Wind Pressure Loading.
- ASTM F588: Type D Hand & Tool Manipulation Test

Reference Data:

1. Test Reports T101-06
   Farabaugh Engineering & Testing, Inc.
2. Anchor Calculations
   Terrence E. Wolfe, P.E. # 44923
3. Certificate of Independence
   By Johnathan Green, P.E. (No. 88223) @ Force Engineering & Testing
   (FBC Organization # ANE ID: 12901)

Quality Assurance Entity:

The manufacturer has established compliance of roof panel products in accordance with the Florida Building Code and Rule 61G20-3.005 (3) for manufacturing under a quality assurance program audited by an approved quality assurance entity.

Installation:

Install per manufacturer's recommended details.

Design Procedure:

Based on the dimensions of the structure, appropriate wind loads are determined using Chapter 16 of the Florida Building Code 2026 for wall cladding wind loads. These component wind loads for wall cladding are compared to the allowable pressure listed above. The design professional shall select the appropriate erection details to reference in his drawings for proper fastener attachment to the structure. Support framing must be in compliance with Florida Building Code 2026.

DATE	ECN	REVISION RECORD	DR	CK
12/29/15	17011	UPDATE FILE NUMBER AND CODE VERSION	MC	MB
01/09/18	18734	UPDATE CODE VERSION	MC	MB
10/01/20	21504	UPDATE CODE VERSION	MC	MB
01/24/23	22669	UPDATE GLASS MANUFACTURER'S UL FILE NUMBER	MC	DM

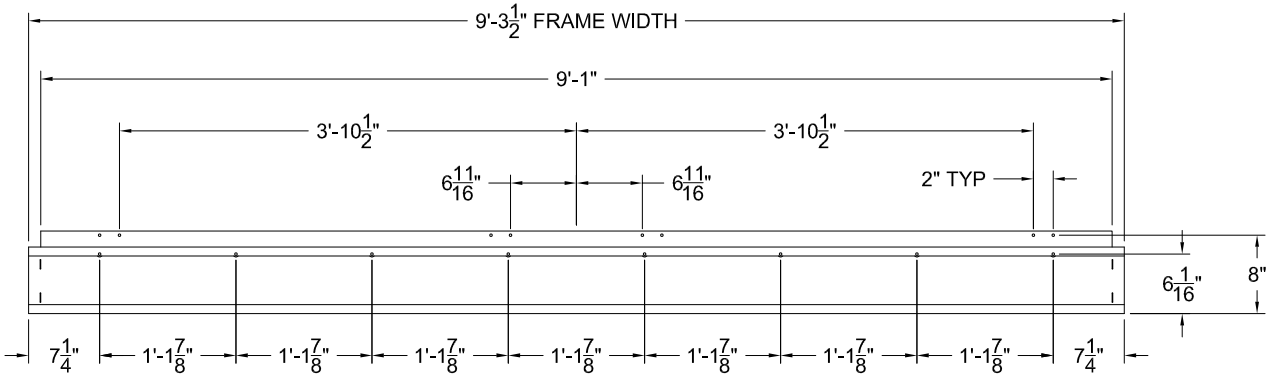

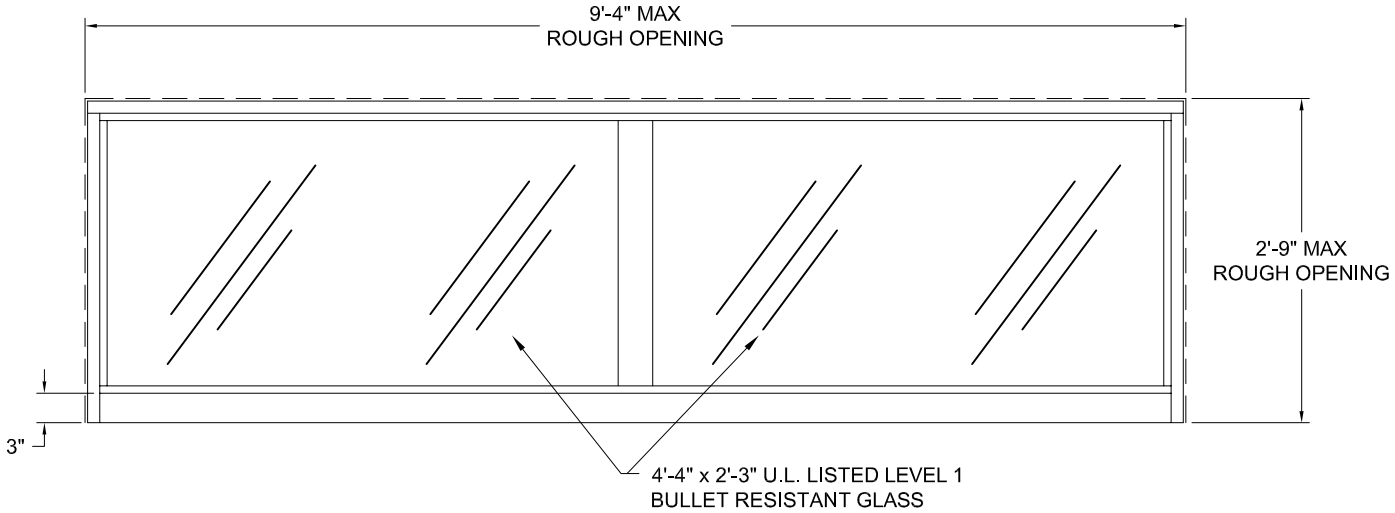

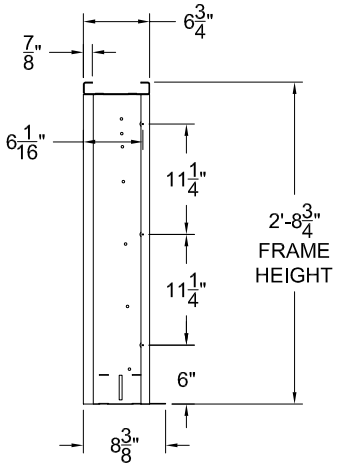

WINDOW MODEL #
12103997

CATEGORY: WINDOWS
SUBCATEGORY: FIXED
APPLICATION STATUS: APPROVED

PROPRIETARY
THIS DOCUMENTATION AND INFORMATION CONTAINED ARE THE SOLE PROPERTY OF E.F.BAVIS & ASSOC., INC. IT SHALL BE RETURNED UPON REQUEST AND SHALL NOT BE REPRODUCED IN WHOLE OR IN PART, OR DISCLOSED TO ANYONE ELSE, OR USED, WITHOUT WRITTEN CONSENT OF E.F. BAVIS & ASSOC., INC.

E.F.BAVIS & ASSOCIATES INC.
201 GRANDIN RD.
MAINEVILLE, OH 45039
T: 513-677-0500 F: 513-677-0552 E: info@bavis.com www.bavis.com

DIMENSIONS ARE IN FT & IN UNLESS OTHERWISE SPECIFIED

TITLE: HVHZ 10' TRIMLESS WINDOW

REVISED	DRAWN		SIZE	DRAWING NO.	SHEET
10/01/20	M. CRAVEN	12/28/15	A	12103997 DIM	1 OF 1

E.F.BAVIS & ASSOC. INC.
201 GRANDIN RD. P.O.BOX 337
MAINEVILLE, OH. 45039 0337
PH 513-677-0500 FAX 513-677-0552

UNLESS OTHERWISE SPECIFIED ALL DIMENSIONS ARE IN INCHES
DECIMALS: .XX + - .01 ; .XXX + - .005 FRACTIONS: + - 1/32; ANGLES: + - 30'
REMOVE ALL BURRS AND SHARP EDGES TO R .02 OR .02 X .02 CHAMFER MAX.

THIS DOCUMENTATION AND INFORMATION CONTAINED ARE THE SOLE PROPERTY OF E.F.BAVIS & ASSOC, INC. IT SHALL BE RETURNED UPON REQUEST AND SHALL NOT BE REPRODUCED IN WHOLE OR IN PART, OR DISCLOSED TO ANYONE ELSE, OR USED, WITHOUT WRITTEN CONSENT OF E.F.BAVIS & ASSOC, INC.

10' FIXED TRIMLESS WINDOW

MODEL	12103997	PAGE	1 OF 17
DWG.	40020	DATE CREATED:	7-14-05 BAP
REV. DATE:			

COPYRIGHT 2005
E.F.Bavis & Assoc. Inc.

EXPLODED VIEW

NO.	ECN
1	7142

ITEM	DESCRIPTION
1	VERTICAL FRAME
2	TOP FRAME
3	SILL LOWER
4	SILL UPPER
5	1-1/2" X 1/4" STEEL BAR, 112" LONG
6	FILLER PLUG, STEEL
7	WINDOW DIVIDER INNER
8	WINDOW DIVIDER OUTER

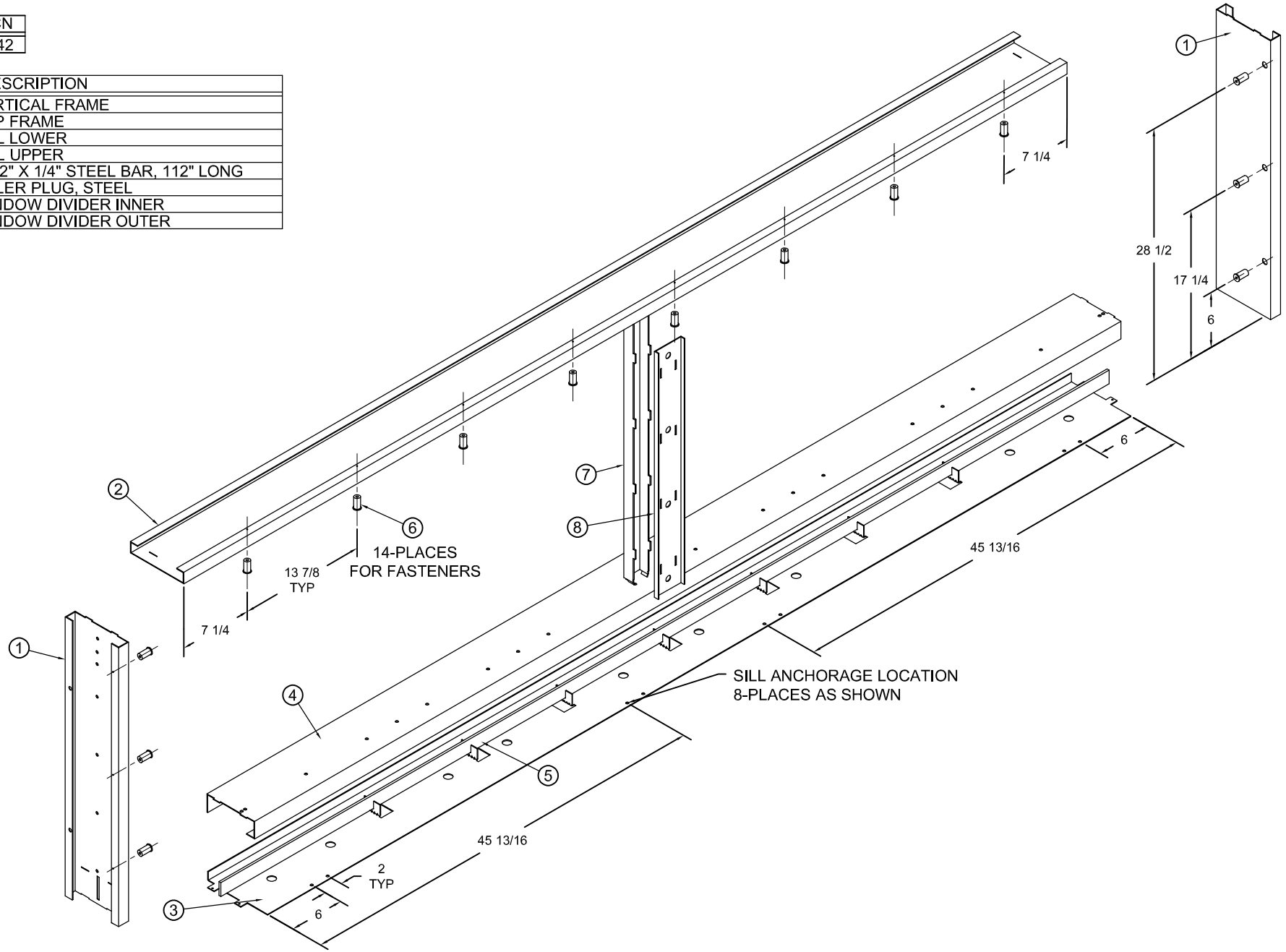

FL 6587.8 R9

E.F.BAVIS & ASSOC. INC.
201 GRANDIN RD. P.O.BOX 337
MAINEVILLE, OH. 45039 0337
PH 513-677-0500 FAX 513-677-0552

UNLESS OTHERWISE SPECIFIED ALL DIMENSIONS ARE IN INCHES
DECIMALS: .XX + - .01 ; .XXX + - .005 FRACTIONS: + - 1/32; ANGLES: + - 30'
REMOVE ALL BURRS AND SHARP EDGES TO R .02 OR .02 X .02 CHAMFER MAX.

THIS DOCUMENTATION AND INFORMATION CONTAINED ARE THE SOLE PROPERTY OF E.F.BAVIS & ASSOC, INC. IT SHALL BE RETURNED UPON REQUEST AND SHALL NOT BE REPRODUCED IN WHOLE OR IN PART, OR DISCLOSED TO ANYONE ELSE, OR USED, WITHOUT WRITTEN CONSENT OF E.F.BAVIS & ASSOC, INC.

10' FIXED TRIMLESS WINDOW

MODEL	12103997	PAGE 2 OF 17	
DWG.	40020	DATE CREATED: 7-14-05	BAP
REV. DATE:			

COPYRIGHT 2005
E.F.Bavis & Assoc. Inc.

VERTICAL FRAME CROSS SECTION, FOR PLANT QUALITY CONTROL

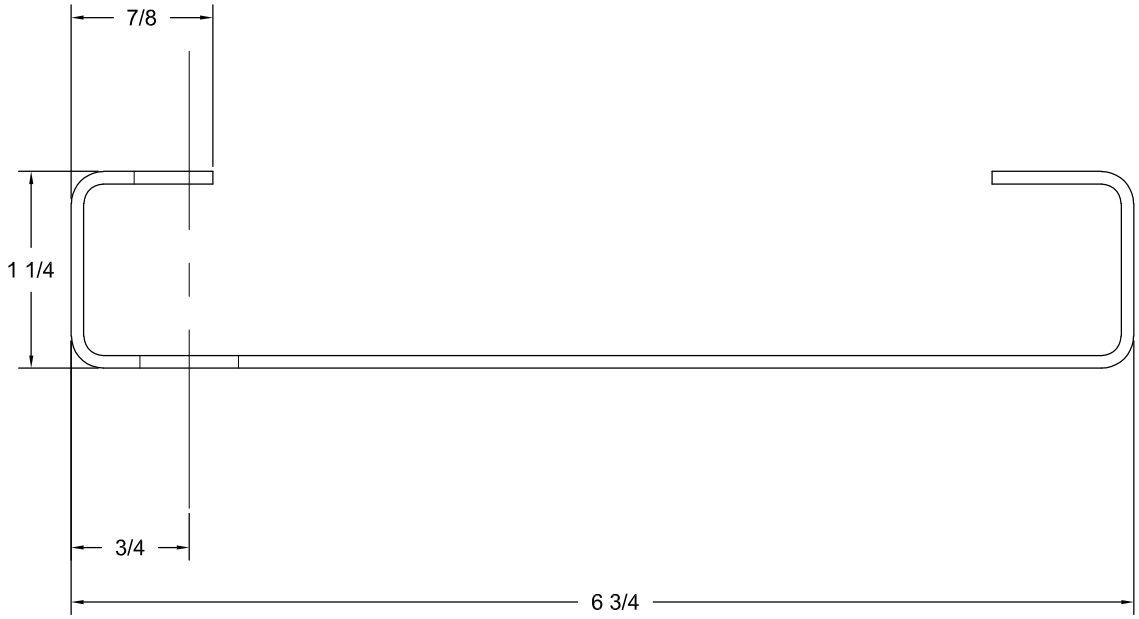

ITEM 1

MATERIAL: ASTM A653 .0785 (14 GAUGE) GALVANNEALED A60

E.F.BAVIS & ASSOC. INC.
201 GRANDIN RD. P.O.BOX 337
MAINEVILLE, OH. 45039 0337
PH 513-677-0500 FAX 513-677-0552

UNLESS OTHERWISE SPECIFIED ALL DIMENSIONS ARE IN INCHES
DECIMALS: .XX + - .01 ; .XXX + - .005 FRACTIONS: + - 1/32; ANGLES: + - 30'
REMOVE ALL BURRS AND SHARP EDGES TO R .02 OR .02 X .02 CHAMFER MAX.

THIS DOCUMENTATION AND INFORMATION CONTAINED ARE THE SOLE PROPERTY OF E.F.BAVIS & ASSOC. INC. IT SHALL BE RETURNED UPON REQUEST AND SHALL NOT BE REPRODUCED IN WHOLE OR IN PART, OR DISCLOSED TO ANYONE ELSE, OR USED, WITHOUT WRITTEN CONSENT OF E.F.BAVIS & ASSOC, INC.

10' FIXED TRIMLESS WINDOW

MODEL	12103997	PAGE 3 OF 17	
DWG.	40020	DATE CREATED: 7-14-05	BAP
REV. DATE:			

COPYRIGHT 2005 E.F.Bavis & Assoc. Inc.

TOP FRAME CROSS SECTION, FOR PLANT QUALITY CONTROL

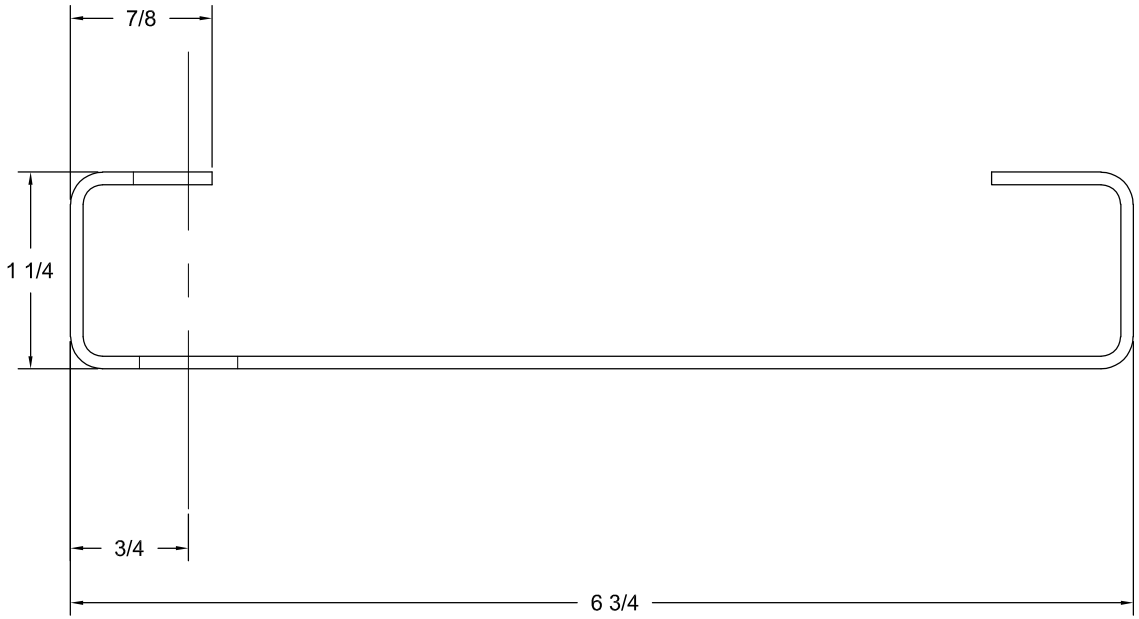

ITEM - 2

MATERIAL: ASTM A653 .0785 (14 GAUGE) GALVANNEALED A60

FL 6587.8 R9

E.F.BAVIS & ASSOC. INC.
201 GRANDIN RD. P.O.BOX 337
MAINEVILLE, OH. 45039 0337
PH 513-677-0500 FAX 513-677-0552

UNLESS OTHERWISE SPECIFIED ALL DIMENSIONS ARE IN INCHES
DECIMALS: .XX + - .01 ; .XXX + - .005 FRACTIONS: + - 1/32; ANGLES: + - 30'
REMOVE ALL BURRS AND SHARP EDGES TO R .02 OR .02 X .02 CHAMFER MAX.

THIS DOCUMENTATION AND INFORMATION CONTAINED ARE THE SOLE PROPERTY OF E.F.BAVIS & ASSOC, INC. IT SHALL BE RETURNED UPON REQUEST AND SHALL NOT BE REPRODUCED IN WHOLE OR IN PART, OR DISCLOSED TO ANYONE ELSE, OR USED, WITHOUT WRITTEN CONSENT OF E.F.BAVIS & ASSOC, INC.

10' FIXED TRIMLESS WINDOW

MODEL	12103997	PAGE 4 OF 17	
DWG.	40020	DATE CREATED: 7-14-05	BAP
REV. DATE:			

COPYRIGHT 2005 E.F.Bavis & Assoc. Inc.

LOWER SILL CROSS SECTION, FOR PLANT QUALITY CONTROL

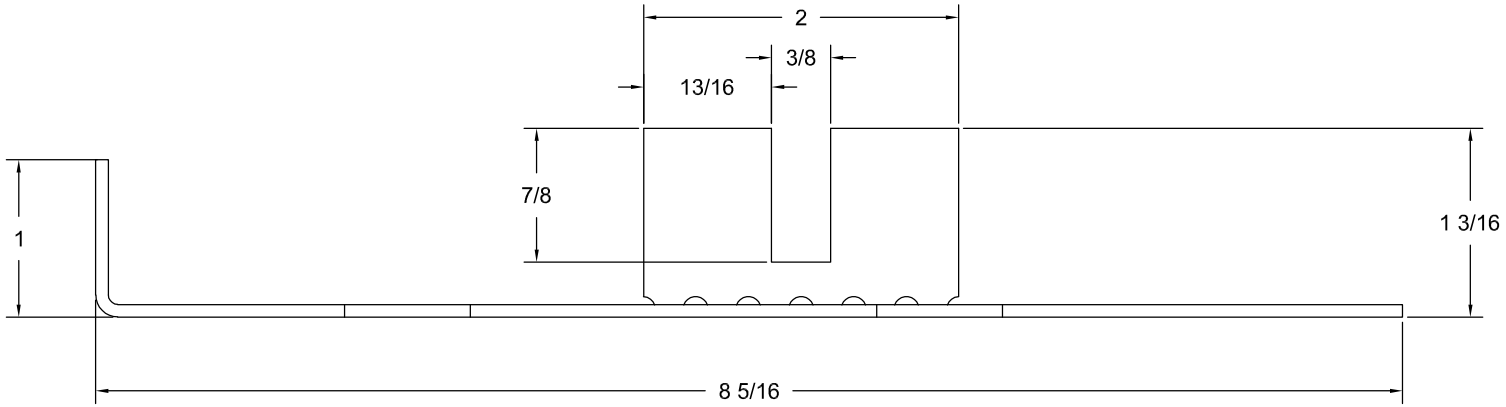

ITEM - 3

MATERIAL: ASTM A653 .0785 (14 GAUGE) GALVANNEALED A60

E.F.BAVIS & ASSOC. INC.
201 GRANDIN RD. P.O.BOX 337
MAINEVILLE, OH. 45039 0337
PH 513-677-0500 FAX 513-677-0552

UNLESS OTHERWISE SPECIFIED ALL DIMENSIONS ARE IN INCHES
DECIMALS: .XX + - .01 ; .XXX + - .005 FRACTIONS: + - 1/32; ANGLES: + - 30'
REMOVE ALL BURRS AND SHARP EDGES TO R .02 OR .02 X .02 CHAMFER MAX.

THIS DOCUMENTATION AND INFORMATION CONTAINED ARE THE SOLE PROPERTY OF E.F.BAVIS & ASSOC, INC. IT SHALL BE RETURNED UPON REQUEST AND SHALL NOT BE REPRODUCED IN WHOLE OR IN PART, OR DISCLOSED TO ANYONE ELSE, OR USED, WITHOUT WRITTEN CONSENT OF E.F.BAVIS & ASSOC, INC.

10' FIXED TRIMLESS WINDOW

MODEL	12103997	PAGE	5 OF 17
DWG.	40020	DATE CREATED:	7-14-05 BAP
REV. DATE:			

COPYRIGHT 2005
E.F.Bavis & Assoc. Inc.

UPPER SILL CROSS SECTION, FOR PLANT QUALITY CONTROL

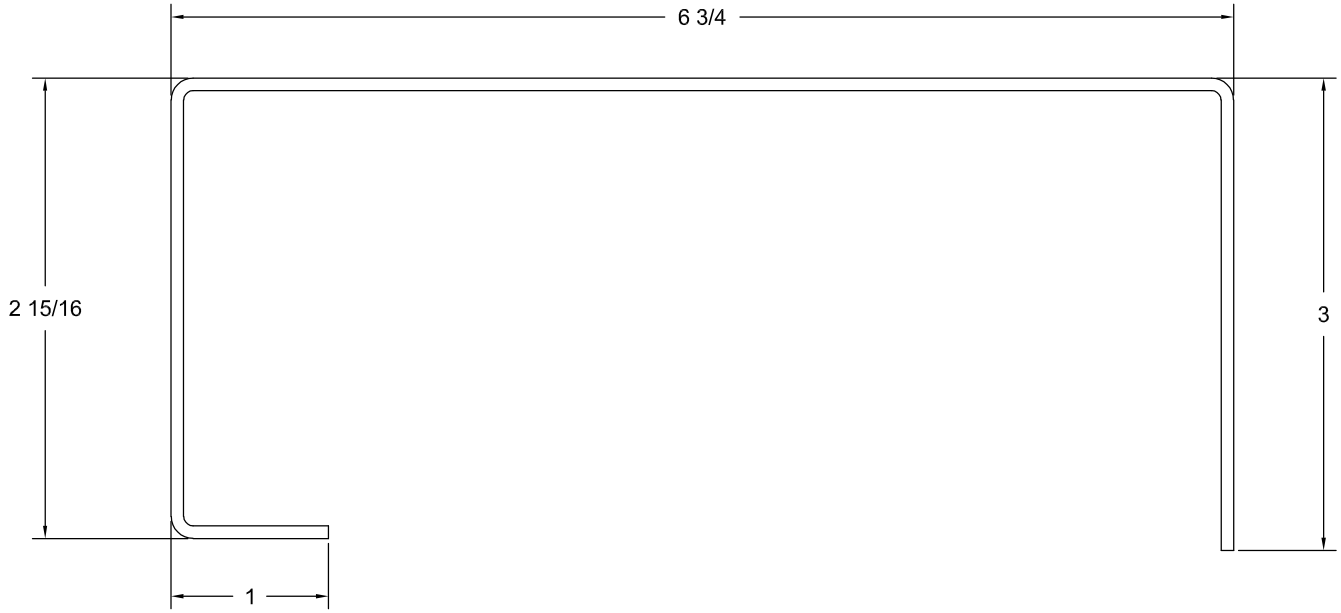

ITEM - 4

MATERIAL: ASTM A653 .0785 (14 GAUGE) GALVANNEALED A60

E.F.BAVIS & ASSOC. INC.
201 GRANDIN RD. P.O.BOX 337
MAINEVILLE, OH. 45039 0337
PH 513-677-0500 FAX 513-677-0552

UNLESS OTHERWISE SPECIFIED ALL DIMENSIONS ARE IN INCHES
DECIMALS: .XX + - .01 ; .XXX + - .005 FRACTIONS: + - 1/32; ANGLES: + - 30'
REMOVE ALL BURRS AND SHARP EDGES TO R .02 OR .02 X .02 CHAMFER MAX.

THIS DOCUMENTATION AND INFORMATION CONTAINED ARE THE SOLE PROPERTY OF E.F.BAVIS & ASSOC, INC. IT SHALL BE RETURNED UPON REQUEST AND SHALL NOT BE REPRODUCED IN WHOLE OR IN PART, OR DISCLOSED TO ANYONE ELSE, OR USED, WITHOUT WRITTEN CONSENT OF E.F.BAVIS & ASSOC, INC.

10' FIXED TRIMLESS WINDOW

MODEL	12103997	PAGE 6 OF 17	
DWG.	40020	DATE CREATED: 7-14-05	BAP
REV. DATE:			

COPYRIGHT 2005 E.F.Bavis & Assoc. Inc.

WINDOW FILLER PLUG, FOR PLANT QUALITY CONTROL

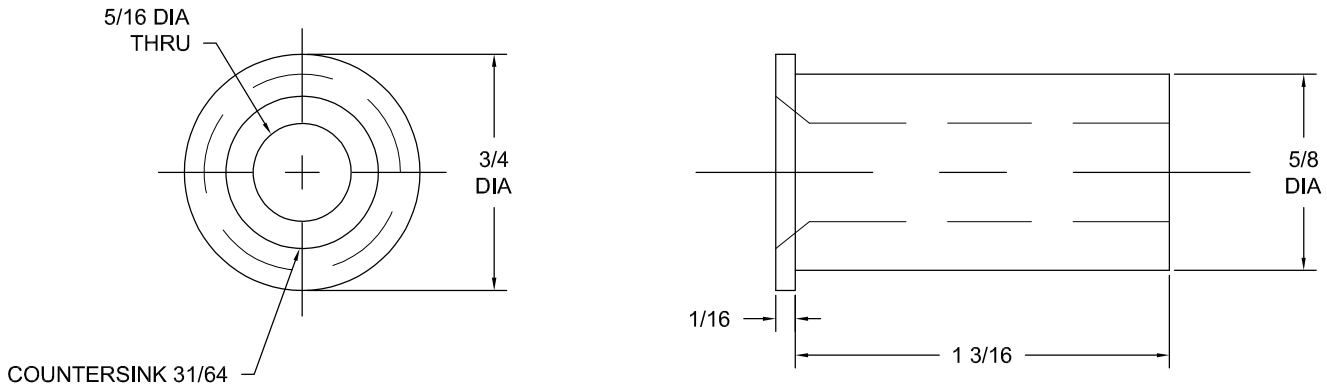

ITEM - 5

MATERIAL: 12L14 STEEL

E.F.BAVIS & ASSOC. INC.
201 GRANDIN RD. P.O.BOX 337
MAINEVILLE, OH. 45039 0337
PH 513-677-0500 FAX 513-677-0552

UNLESS OTHERWISE SPECIFIED ALL DIMENSIONS ARE IN INCHES
DECIMALS: .XX + - .01 ; .XXX + - .005 FRACTIONS: + - 1/32; ANGLES: + - 30'
REMOVE ALL BURRS AND SHARP EDGES TO R .02 OR .02 X .02 CHAMFER MAX.

THIS DOCUMENTATION AND INFORMATION CONTAINED ARE THE SOLE PROPERTY OF E.F.BAVIS & ASSOC, INC. IT SHALL BE RETURNED UPON REQUEST AND SHALL NOT BE REPRODUCED IN WHOLE OR IN PART, OR DISCLOSED TO ANYONE ELSE, OR USED, WITHOUT WRITTEN CONSENT OF E.F.BAVIS & ASSOC, INC.

10' FIXED TRIMLESS WINDOW

MODEL	12103997	PAGE 7 OF 17	
DWG.	40020	DATE CREATED: 7-14-05	BAP
REV. DATE:			

COPYRIGHT 2005 E.F.Bavis & Assoc. Inc.

WINDOW DIVIDER CROSS SECTION, FOR PLANT QUALITY CONTROL

NO.	ECN
1	7142

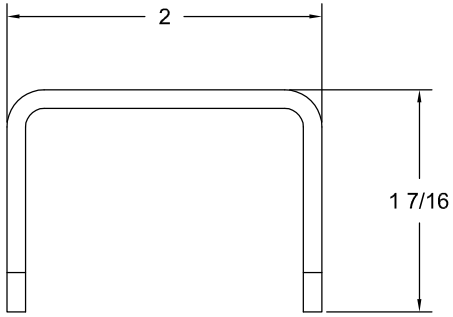

ITEM 7

MATERIAL: ASTM A653 .118 (11 GAUGE) COLD FINISHED

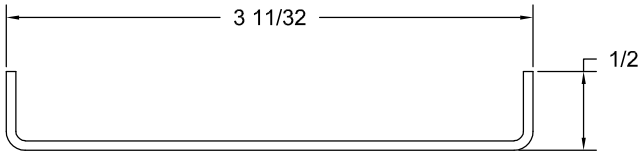

ITEM 8

MATERIAL: ASTM A653 .0785 (14 GAUGE) GALVANNEALED A60

E.F.BAVIS & ASSOC. INC.
201 GRANDIN RD. P.O.BOX 337
MAINEVILLE, OH. 45039 0337
PH 513-677-0500 FAX 513-677-0552

UNLESS OTHERWISE SPECIFIED ALL DIMENSIONS ARE IN INCHES
DECIMALS: .XX + - .01 ; .XXX + - .005 FRACTIONS: + - 1/32; ANGLES: + - 30'
REMOVE ALL BURRS AND SHARP EDGES TO R .02 OR .02 X .02 CHAMFER MAX.

THIS DOCUMENTATION AND INFORMATION CONTAINED ARE THE SOLE PROPERTY OF E.F.BAVIS & ASSOC, INC. IT SHALL BE RETURNED UPON REQUEST AND SHALL NOT BE REPRODUCED IN WHOLE OR IN PART, OR DISCLOSED TO ANYONE ELSE, OR USED, WITHOUT WRITTEN CONSENT OF E.F.BAVIS & ASSOC, INC.

10' FIXED TRIMLESS WINDOW

MODEL	12103997	PAGE	8 OF 17
DWG.	40020	DATE CREATED:	7-14-05 BAP
REV. DATE:	04/11/14	MJC	COPYRIGHT 2005 E.F.Bavis & Assoc. Inc.

WINDOW WELDMENT DETAIL, FOR PLANT QUALITY CONTROL

NO.	ECN
1	15315

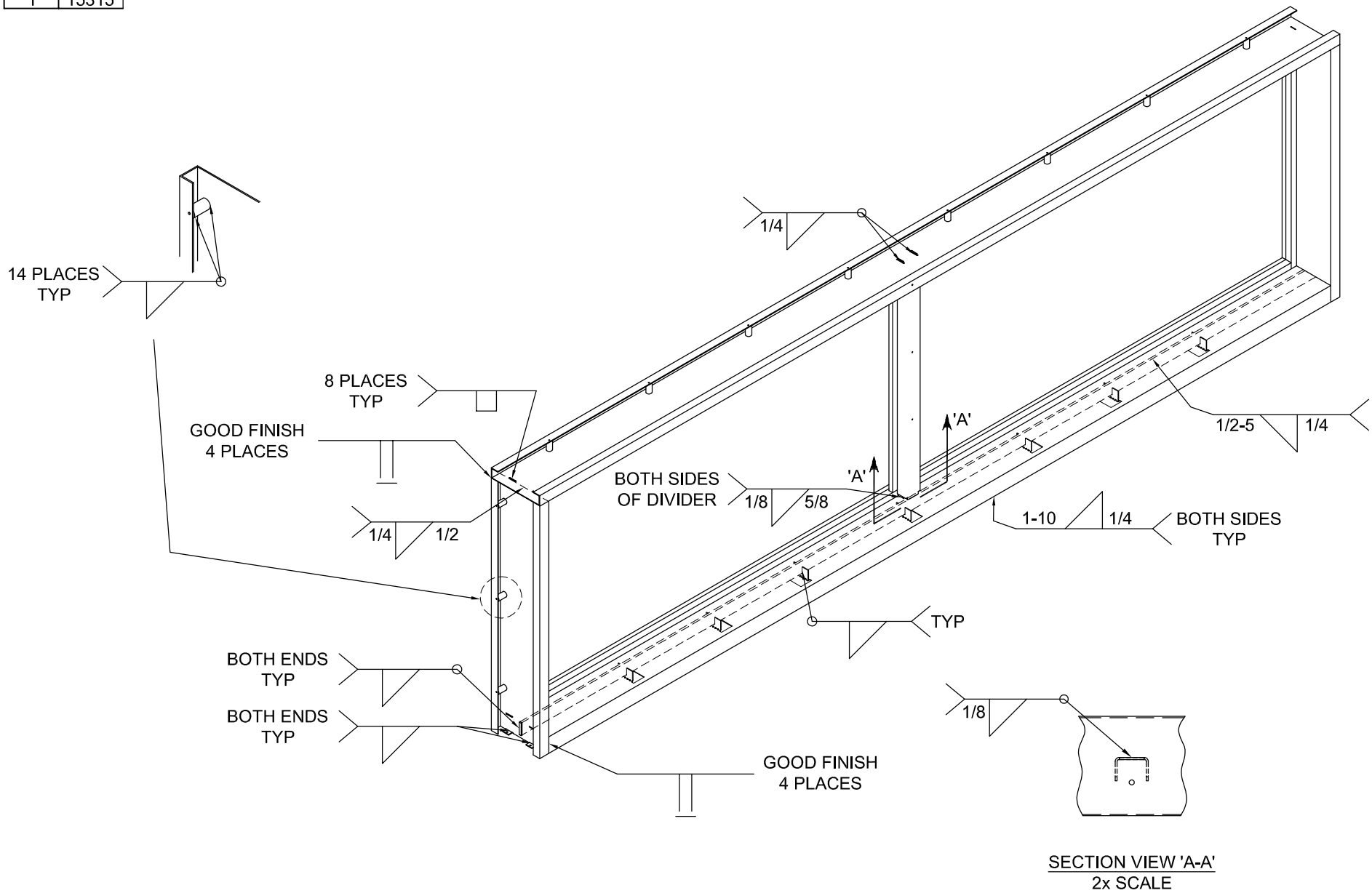

FL 6587.8 R9

E.F.BAVIS & ASSOC. INC.
201 GRANDIN RD. P.O.BOX 337
MAINEVILLE, OH. 45039 0337
PH 513-677-0500 FAX 513-677-0552

UNLESS OTHERWISE SPECIFIED ALL DIMENSIONS ARE IN INCHES
DECIMALS: .XX + - .01 ; .XXX + - .005 FRACTIONS: + - 1/32; ANGLES: + - 30'
REMOVE ALL BURRS AND SHARP EDGES TO R .02 OR .02 X .02 CHAMFER MAX.

THIS DOCUMENTATION AND INFORMATION CONTAINED ARE THE SOLE PROPERTY OF E.F.BAVIS & ASSOC. INC. IT SHALL BE RETURNED UPON REQUEST AND SHALL NOT BE REPRODUCED IN WHOLE OR IN PART, OR DISCLOSED TO ANYONE ELSE, OR USED, WITHOUT WRITTEN CONSENT OF E.F.BAVIS & ASSOC. INC.

10' FIXED TRIMLESS WINDOW

MODEL	12103997	PAGE	9 OF 17
DWG.	40020	DATE CREATED: 07/14/05	BAP
		LAST DATE: 08/21/12	MJC
REV. DATE:	08/10/17	MJC	COPYRIGHT 2005 E.F.Bavis & Assoc. Inc.

UNINSULATED GLASS WINDOW GLAZING DETAIL, FOR PLANT QUALITY CONTROL

ITEM	DESCRIPTION
1	VERTICAL FRAME
2	3/4" X 3/4" ALUMINUM EXTRUSION
3	UL LISTED 78CL, LEVEL 1 BULLET RESISTANT GLASS
	STANDARD MAKE-UP: 1/4" ANNEALED, 1/2" ANNEALED, 3/8" ANNEALED & 3/32" ANNEALED GLASS WITH 0.030" KURARAY TROSIFOL PVB (POLYVINYL BUTYRAL) INTERLAYERS
	INSULATED MAKE-UP: 1/4" ANNEALED, 1/4" AIR SPACE, 1/4" ANNEALED,1/2" ANNEALED, 3/8" ANNEALED & 3/32" ANNEALED GLASS WITH 0.030" KURARAY TROSIFOL PVB (POLYVINYL BUTYRAL) INTERLAYERS
4	1" X 4" X 3/16" THICK, RUBBER SETTING BLOCK
5	1/16" BUTYL TAPE, TREMCO 7242YA1760
6	1/4-20 X 1/2" PHILIPS TRUSS HEAD, ZINC COATED
7	#8-32 X 1" SPANNER FLAT HEAD, STAINLESS STEEL
8	CRL POLYURETHANE CONSTRUCTION SEALANT, CAT. NO. M64

NO.	ECN
1	18555
2	22669

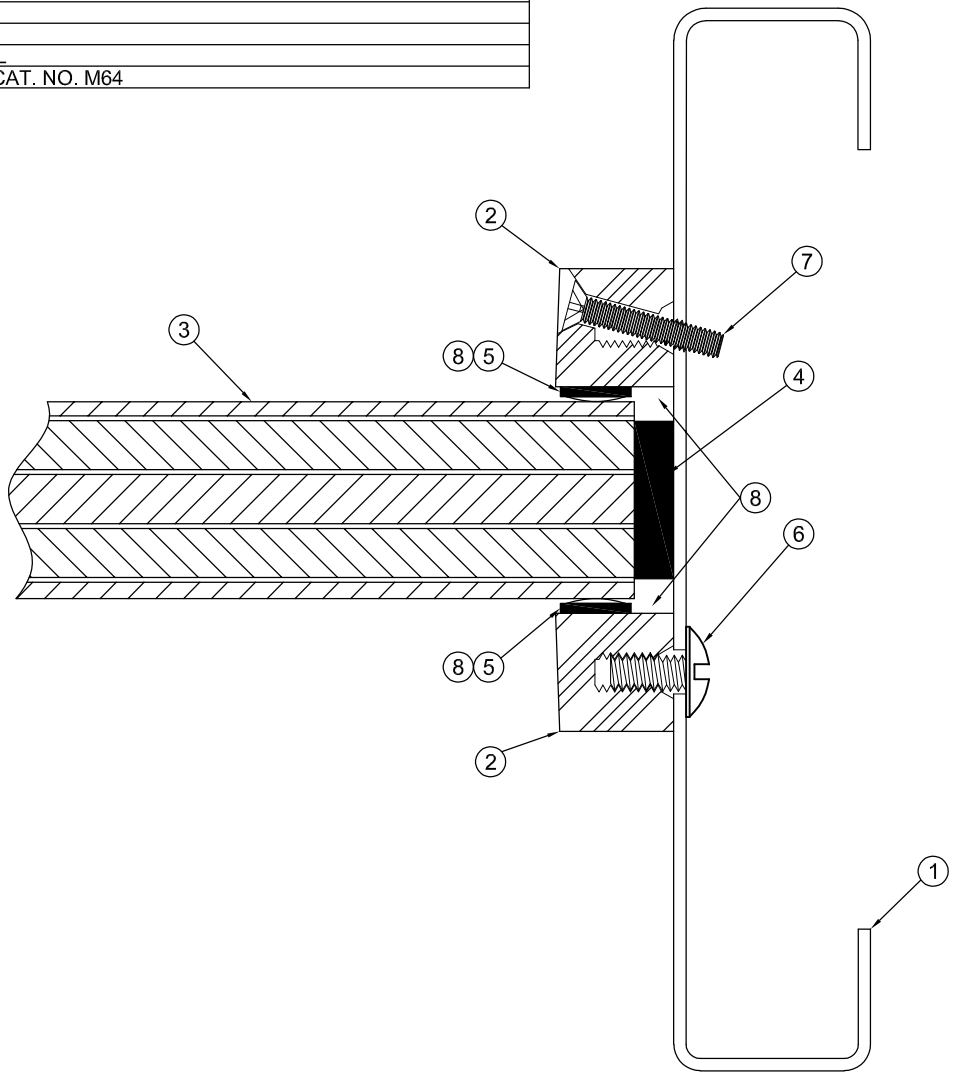

FL 6587.8 R9

E.F.BAVIS & ASSOC. INC.
201 GRANDIN RD. P.O.BOX 337
MAINEVILLE, OH. 45039 0337
PH 513-677-0500 FAX 513-677-0552

UNLESS OTHERWISE SPECIFIED ALL DIMENSIONS ARE IN INCHES
DECIMALS: .XX + - .02 ; .XXX + - .005 FRACTIONS: + - 1/32; ANGLES: + - 30'
REMOVE ALL BURRS AND SHARP EDGES TO R .02 OR .02 X .02 CHAMFER MAX.

THIS DOCUMENTATION AND INFORMATION CONTAINED ARE THE SOLE PROPERTY OF E.F.BAVIS & ASSOC, INC. IT SHALL BE RETURNED UPON REQUEST AND SHALL NOT BE REPRODUCED IN WHOLE OR IN PART, OR DISCLOSED TO ANYONE ELSE, OR USED, WITHOUT WRITTEN CONSENT OF E.F.BAVIS & ASSOC, INC.

10' FIXED TRIMLESS WINDOW

MODEL	12103997	PAGE	10.1 OF 17
DWG.	40020	DATE CREATED:	02-10-06 BB
REV. DATE:			

COPYRIGHT 2005
E.F.Bavis & Assoc. Inc.

OUTSIDE WINDOW STOP BAR CROSS SECTION, FOR PLANT QUALITY CONTROL

NO.	ECN
1	7142

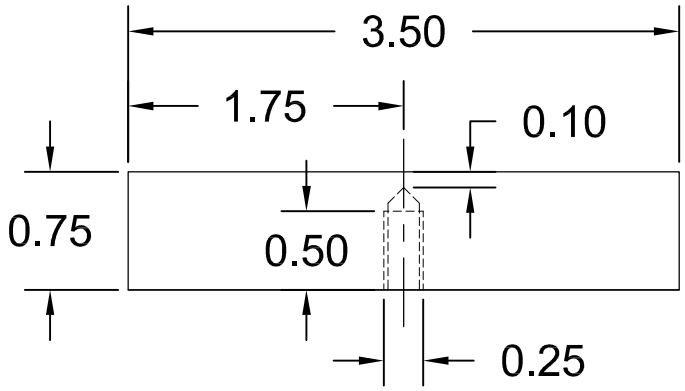

ITEM 2

MATERIAL: 6061-T6 ALUMINUM

E.F.BAVIS & ASSOC. INC.
201 GRANDIN RD. P.O.BOX 337
MAINEVILLE, OH. 45039 0337
PH 513-677-0500 FAX 513-677-0552

UNLESS OTHERWISE SPECIFIED ALL DIMENSIONS ARE IN INCHES
DECIMALS: .XX + - .01 ; .XXX + - .005 FRACTIONS: + - 1/32; ANGLES: + - 30'
REMOVE ALL BURRS AND SHARP EDGES TO R .02 OR .02 X .02 CHAMFER MAX.

THIS DOCUMENTATION AND INFORMATION CONTAINED ARE THE SOLE PROPERTY OF E.F.BAVIS & ASSOC, INC. IT SHALL BE RETURNED UPON REQUEST AND SHALL NOT BE REPRODUCED IN WHOLE OR IN PART, OR DISCLOSED TO ANYONE ELSE, OR USED, WITHOUT WRITTEN CONSENT OF E.F.BAVIS & ASSOC, INC.

10' FIXED TRIMLESS WINDOW

MODEL	12103997	PAGE	10.2 OF 17
DWG.	40020	DATE CREATED:	02-10-06 BB
REV. DATE:			

COPYRIGHT 2005
E.F.Bavis & Assoc. Inc.

WINDOW DIVIDER INSIDE COVER CROSS SECTION, FOR PLANT QUALITY CONTROL

NO.	ECN
1	7142

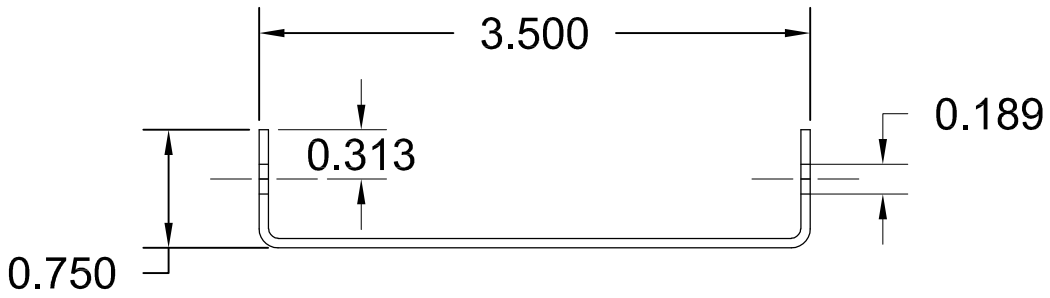

ITEM 6

MATERIAL: 16 GAUGE GALVANNEALED STEEL

E.F.BAVIS & ASSOC. INC.
201 GRANDIN RD. P.O.BOX 337
MAINEVILLE, OH. 45039 0337
PH 513-677-0500 FAX 513-677-0552

UNLESS OTHERWISE SPECIFIED ALL DIMENSIONS ARE IN INCHES
DECIMALS: .XX + - .01 ; .XXX + - .005 FRACTIONS: + - 1/32; ANGLES: + - 30'
REMOVE ALL BURRS AND SHARP EDGES TO R .02 OR .02 X .02 CHAMFER MAX.

THIS DOCUMENTATION AND INFORMATION CONTAINED ARE THE SOLE PROPERTY OF E.F.BAVIS & ASSOC. INC. IT SHALL BE RETURNED UPON REQUEST AND SHALL NOT BE REPRODUCED IN WHOLE OR IN PART, OR DISCLOSED TO ANYONE ELSE, OR USED, WITHOUT WRITTEN CONSENT OF E.F.BAVIS & ASSOC. INC.

10' FIXED TRIMLESS WINDOW

MODEL	12103997	PAGE	10 OF 17
DWG.	40020	DATE CREATED: 07/14/05	BAP
		LAST DATE: 08/21/12	MJC
REV. DATE:	08/10/17	MJC	COPYRIGHT 2005 E.F.Bavis & Assoc. Inc.

INSULATED GLASS WINDOW GLAZING DETAIL, FOR PLANT QUALITY CONTROL

ITEM	DESCRIPTION
1	WINDOW DIVIDER
2	OUTSIDE WINDOW STOP BAR
3	UL LISTED 78CL, LEVEL 1 BULLET RESISTANT GLASS
	STANDARD MAKE-UP: 1/4" ANNEALED, 1/2" ANNEALED, 3/8" ANNEALED & 3/32" ANNEALED GLASS WITH 0.030" KURARAY TROSIFOL PVB (POLYVINYL BUTYRAL) INTERLAYERS
	INSULATED MAKE-UP: 1/4" ANNEALED, 1/4" AIR SPACE, 1/4" ANNEALED,1/2" ANNEALED, 3/8" ANNEALED & 3/32" ANNEALED GLASS WITH 0.030" KURARAY TROSIFOL PVB (POLYVINYL BUTYRAL) INTERLAYERS
4	1" X 4" X 3/16" THICK, RUBBER SETTING BLOCK
5	1/16" BUTYL TAPE, TREMCO 7242YA1760
6	WINDOW DIVIDER INSIDE COVER
7	CRL POLYURETHANE CONSTRUCTION SEALANT, CAT. NO. M64
8	1/4-20 NYLONG LOCKING NUT
9	1/4-20 STUD
10	#8-32 x .63 PHILIPS BUTTON HEAD

NO.	ECN
1	18555
2	22669

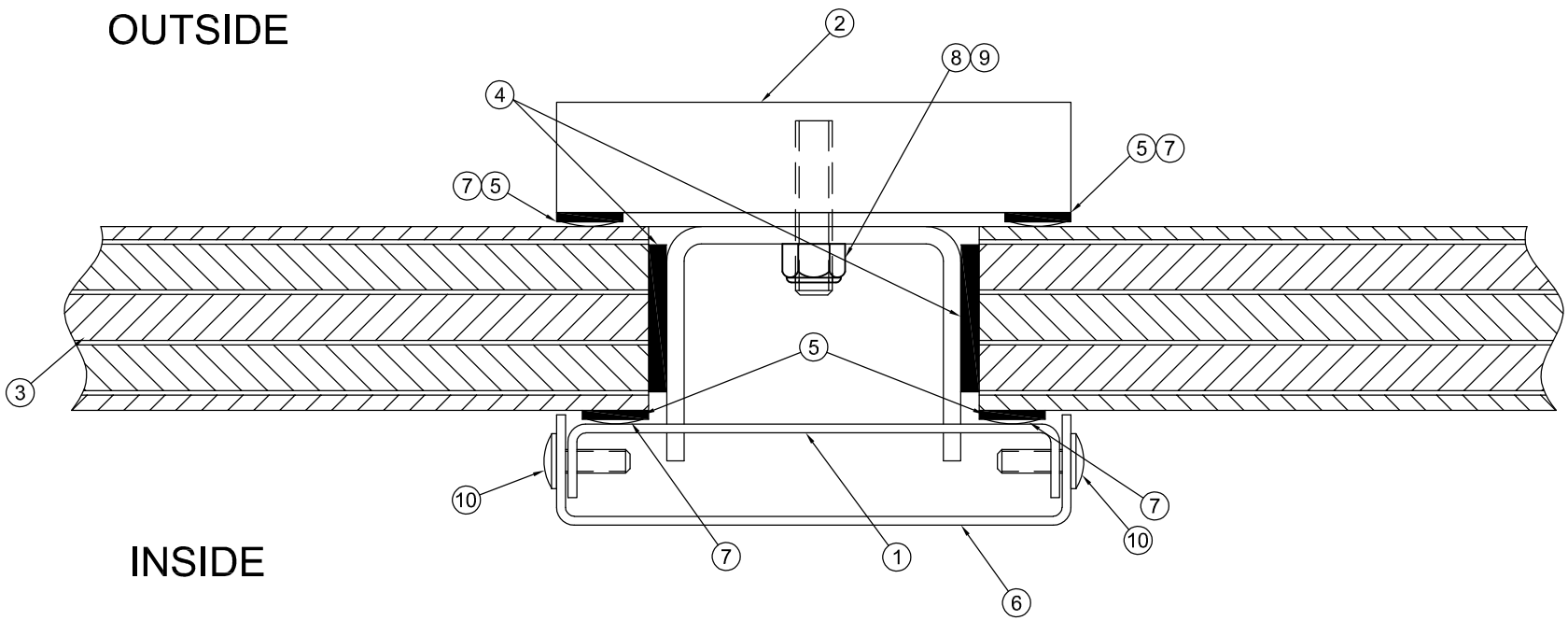

FL 6587.8 R9

E.F.BAVIS & ASSOC. INC.
201 GRANDIN RD. P.O.BOX 337
MAINEVILLE, OH. 45039 0337
PH 513-677-0500 FAX 513-677-0552

UNLESS OTHERWISE SPECIFIED ALL DIMENSIONS ARE IN INCHES
DECIMALS: .XX + - .01 ; .XXX + - .005 FRACTIONS: + - 1/32; ANGLES: + - 30'
REMOVE ALL BURRS AND SHARP EDGES TO R .02 OR .02 X .02 CHAMFER MAX.

THIS DOCUMENTATION AND INFORMATION CONTAINED ARE THE SOLE PROPERTY OF E.F.BAVIS & ASSOC, INC. IT SHALL BE RETURNED UPON REQUEST AND SHALL NOT BE REPRODUCED IN WHOLE OR IN PART, OR DISCLOSED TO ANYONE ELSE, OR USED, WITHOUT WRITTEN CONSENT OF E.F.BAVIS & ASSOC, INC.

10' FIXED TRIMLESS WINDOW

MODEL	12103997	PAGE	11 OF 17
DWG.	40020	DATE CREATED:	7-14-05 BAP
REV. DATE:			COPYRIGHT 2005 E.F.Bavis & Assoc. Inc.

FASTENER INSTALLATION DETAIL: MASONRY, HEAD & JAMB

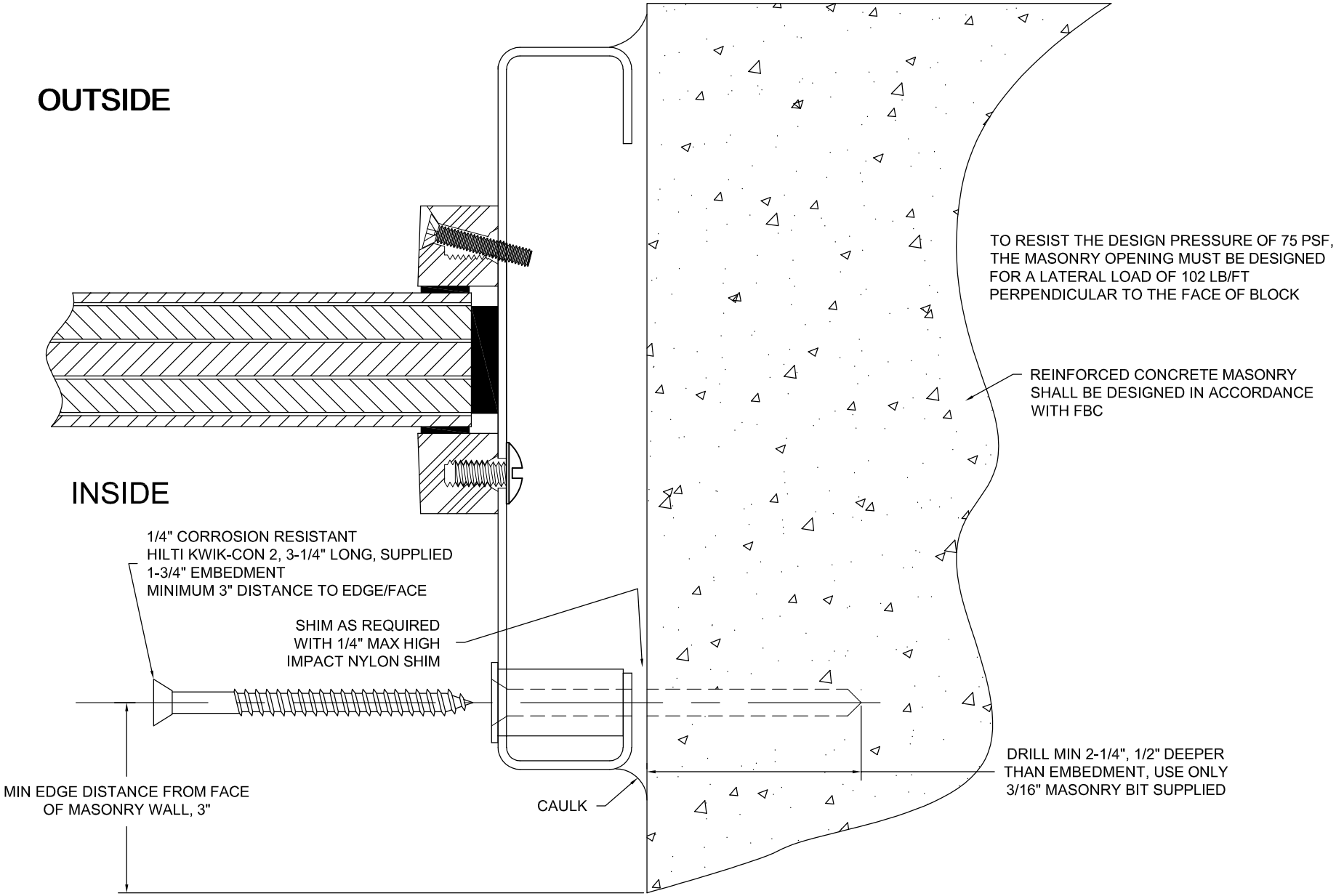

E.F.BAVIS & ASSOC. INC.
201 GRANDIN RD. P.O.BOX 337
MAINEVILLE, OH. 45039 0337
PH 513-677-0500 FAX 513-677-0552

UNLESS OTHERWISE SPECIFIED ALL DIMENSIONS ARE IN INCHES
DECIMALS: .XX + - .01 ; .XXX + - .005 FRACTIONS: + - 1/32; ANGLES: + - 30'
REMOVE ALL BURRS AND SHARP EDGES TO R .02 OR .02 X .02 CHAMFER MAX.

THIS DOCUMENTATION AND INFORMATION CONTAINED ARE THE SOLE PROPERTY OF E.F.BAVIS & ASSOC, INC. IT SHALL BE RETURNED UPON REQUEST AND SHALL NOT BE REPRODUCED IN WHOLE OR IN PART, OR DISCLOSED TO ANYONE ELSE, OR USED, WITHOUT WRITTEN CONSENT OF E.F.BAVIS & ASSOC, INC.

10' FIXED TRIMLESS WINDOW

MODEL	12103997	PAGE	12 OF 17
DWG.	40020	DATE CREATED:	7-14-05 BAP
REV. DATE:			

COPYRIGHT 2005 E.F.Bavis & Assoc. Inc.

FASTENER INSTALLATION DETAIL: METAL, HEAD AND JAMB, FIELD VERIFIED

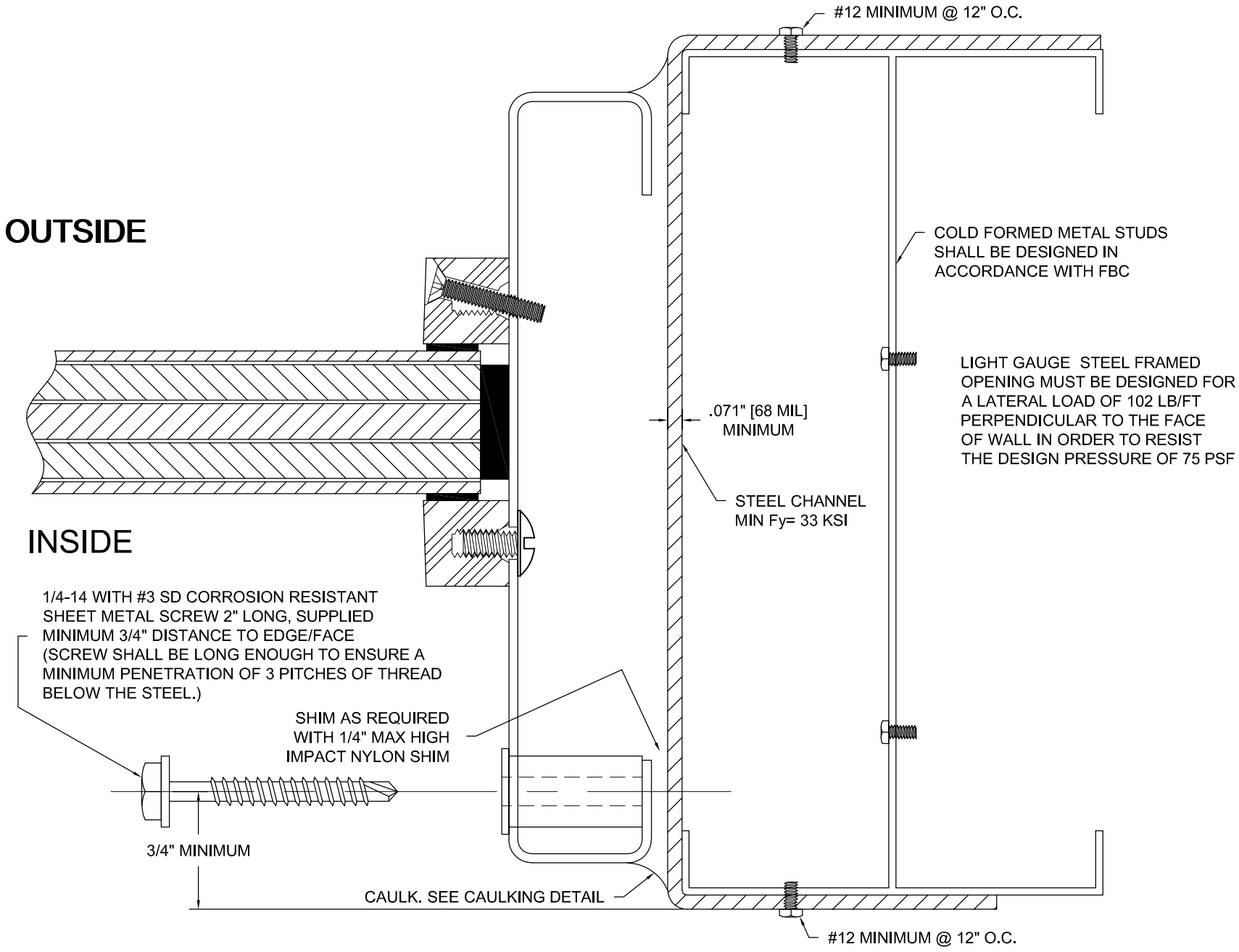

E.F.BAVIS & ASSOC. INC.
201 GRANDIN RD. P.O.BOX 337
MAINEVILLE, OH. 45039 0337
PH 513-677-0500 FAX 513-677-0552

UNLESS OTHERWISE SPECIFIED ALL DIMENSIONS ARE IN INCHES
DECIMALS: .XX + - .01 ; .XXX + - .005 FRACTIONS: + - 1/32; ANGLES: + - 30'
REMOVE ALL BURRS AND SHARP EDGES TO R .02 OR .02 X .02 CHAMFER MAX.

THIS DOCUMENTATION AND INFORMATION CONTAINED ARE THE SOLE PROPERTY OF E.F.BAVIS & ASSOC, INC. IT SHALL BE RETURNED UPON REQUEST AND SHALL NOT BE REPRODUCED IN WHOLE OR IN PART, OR DISCLOSED TO ANYONE ELSE, OR USED, WITHOUT WRITTEN CONSENT OF E.F.BAVIS & ASSOC, INC.

10' FIXED TRIMLESS WINDOW

MODEL	12103997	PAGE	13 OF 17
DWG.	40020	DATE CREATED:	7-14-05 BAP
REV. DATE:			

COPYRIGHT 2005
E.F.Bavis & Assoc. Inc.

FASTENER INSTALLATION DETAIL: WOOD, HEAD AND JAMB, FIELD VERIFIED

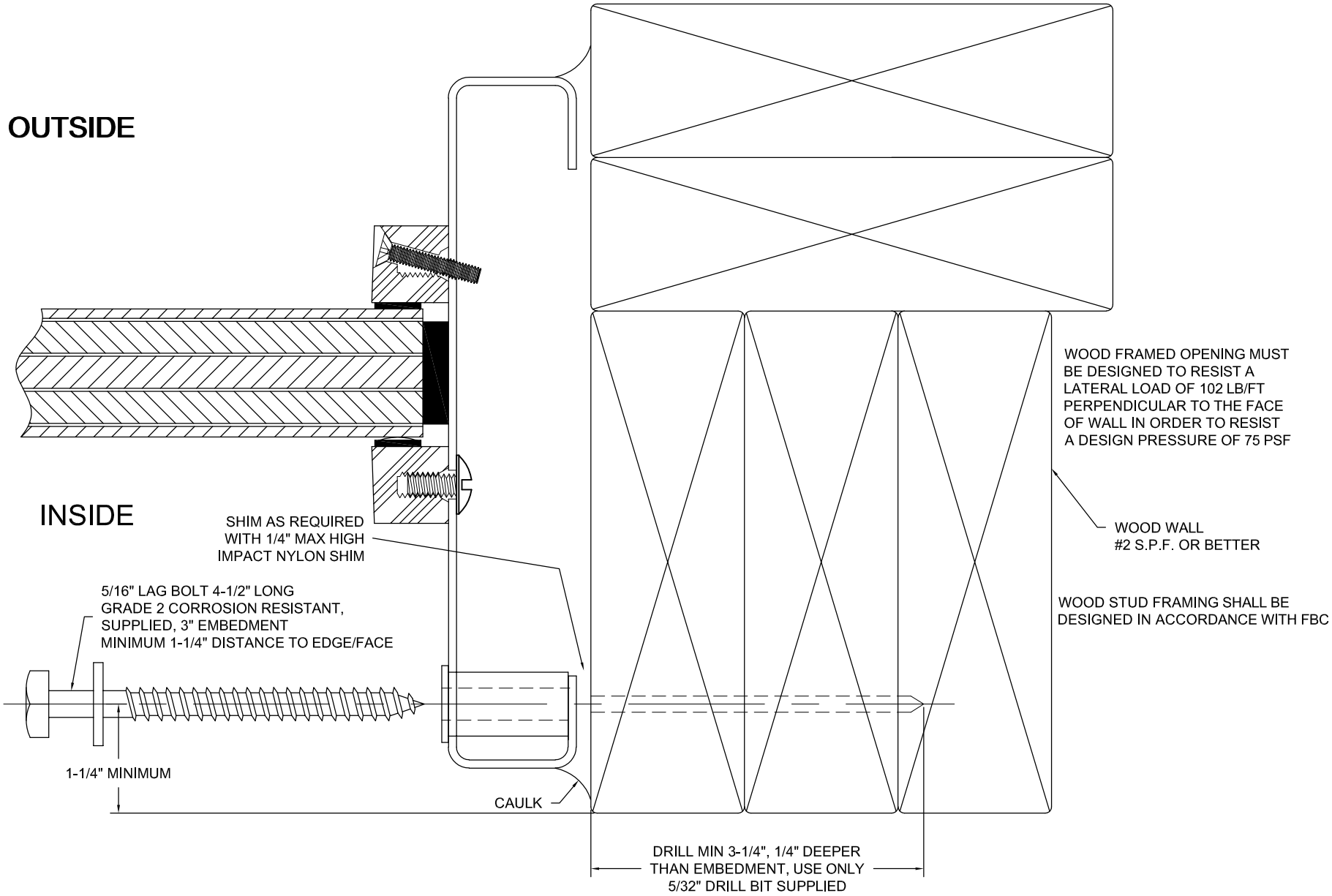

E.F.BAVIS & ASSOC. INC.
201 GRANDIN RD. P.O.BOX 337
MAINEVILLE, OH. 45039 0337
PH 513-677-0500 FAX 513-677-0552

UNLESS OTHERWISE SPECIFIED ALL DIMENSIONS ARE IN INCHES
DECIMALS: .XX + - .01; .XXX + - .005 FRACTIONS: + - 1/32; ANGLES: + - 30'
REMOVE ALL BURRS AND SHARP EDGES TO R .02 OR .02 X .02 CHAMFER MAX.

THIS DOCUMENTATION AND INFORMATION CONTAINED ARE THE SOLE PROPERTY OF E.F.BAVIS & ASSOC, INC. IT SHALL BE RETURNED UPON REQUEST AND SHALL NOT BE REPRODUCED IN WHOLE OR IN PART, OR DISCLOSED TO ANYONE ELSE, OR USED, WITHOUT WRITTEN CONSENT OF E.F.BAVIS & ASSOC, INC.

10' FIXED TRIMLESS WINDOW

MODEL	12103997	PAGE	14 OF 17
DWG.	40020	DATE CREATED:	7-14-05 BAP
REV. DATE:			

COPYRIGHT 2005 E.F.Bavis & Assoc. Inc.

FASTENER INSTALLATION DETAIL: SILL, MASONRY WALL, FIELD VERIFIED

TO RESIST THE DESIGN PRESSURE OF 75 PSF, THE MASONRY OPENING MUST BE DESIGNED FOR A LATERAL LOAD OF 102 LB/FT PERPENDICULAR TO THE FACE OF BLOCK

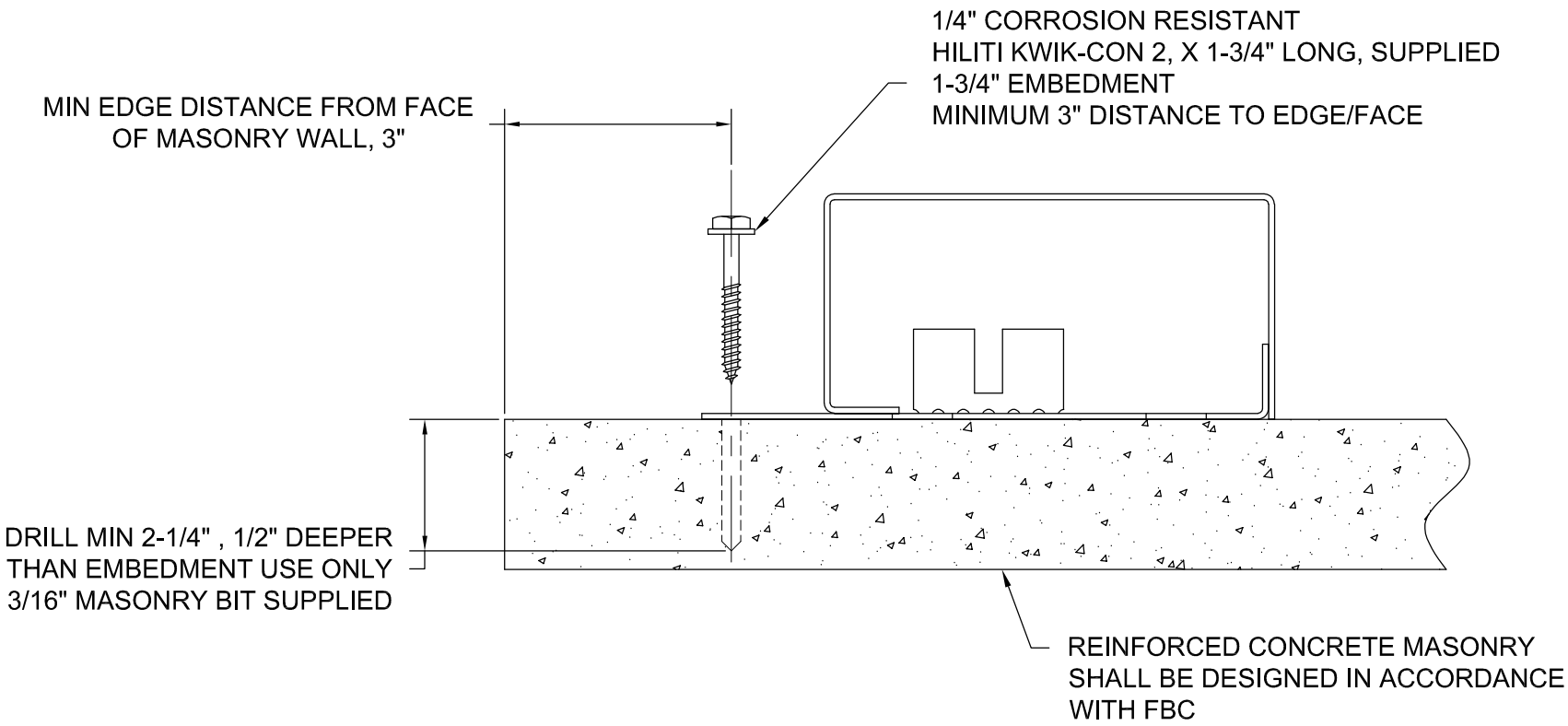

E.F.BAVIS & ASSOC. INC.
201 GRANDIN RD. P.O.BOX 337
MAINEVILLE, OH. 45039 0337
PH 513-677-0500 FAX 513-677-0552

UNLESS OTHERWISE SPECIFIED ALL DIMENSIONS ARE IN INCHES
DECIMALS: .XX + - .01; .XXX + - .005 FRACTIONS: + - 1/32; ANGLES: + - 30'
REMOVE ALL BURRS AND SHARP EDGES TO R .02 OR .02 X .02 CHAMFER MAX.

THIS DOCUMENTATION AND INFORMATION CONTAINED ARE THE SOLE PROPERTY OF E.F.BAVIS & ASSOC, INC. IT SHALL BE RETURNED UPON REQUEST AND SHALL NOT BE REPRODUCED IN WHOLE OR IN PART, OR DISCLOSED TO ANYONE ELSE, OR USED, WITHOUT WRITTEN CONSENT OF E.F.BAVIS & ASSOC, INC.

10' FIXED
TRIMLESS WINDOW

MODEL	12103997	PAGE 15 OF 17	
DWG.	40020	DATE CREATED: 7-14-05	BAP
REV. DATE:			

COPYRIGHT 2005
E.F.Bavis & Assoc. Inc.

FASTENER INSTALLATION DETAIL: SILL, METAL WALL, FIELD VERIFIED

COLD FORMED METAL STUDS SHALL BE DESIGNED IN ACCORDANCE WITH FBC

LIGHT GAUGE STEEL FRAMED OPENING MUST BE DESIGNED FOR A LATERAL LOAD OF 102 LB/FT PERPENDICULAR TO THE FACE OF WALL IN ORDER TO RESIST THE DESIGN PRESSURE OF 75 PSF

1/4-14 WITH #3 SD SHEET METAL SCREW 1" LONG, SUPPLIED MINIMUM 3/4" DISTANCE TO EDGE/FACE (SCREW SHALL BE LONG ENOUGH TO ENSURE A MINIMUM PENETRATION OF 3 PITCHES OF THREAD BELOW THE STEEL.)

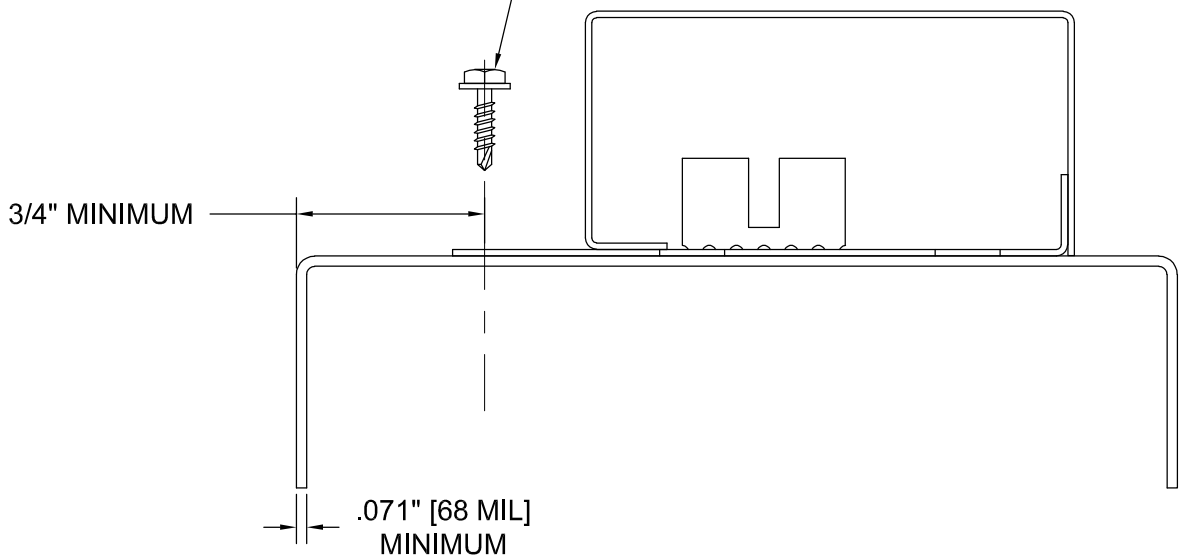

E.F.BAVIS & ASSOC. INC.
201 GRANDIN RD. P.O.BOX 337
MAINEVILLE, OH. 45039 0337
PH 513-677-0500 FAX 513-677-0552

UNLESS OTHERWISE SPECIFIED ALL DIMENSIONS ARE IN INCHES
DECIMALS: .XX + - .01 ; .XXX + - .005 FRACTIONS: + - 1/32; ANGLES: + - 30'
REMOVE ALL BURRS AND SHARP EDGES TO R .02 OR .02 X .02 CHAMFER MAX.

THIS DOCUMENTATION AND INFORMATION CONTAINED ARE THE SOLE PROPERTY OF E.F.BAVIS & ASSOC, INC. IT SHALL BE RETURNED UPON REQUEST AND SHALL NOT BE REPRODUCED IN WHOLE OR IN PART, OR DISCLOSED TO ANYONE ELSE, OR USED, WITHOUT WRITTEN CONSENT OF E.F.BAVIS & ASSOC, INC.

10' FIXED TRIMLESS WINDOW

MODEL	12103997	PAGE	16 OF 17
DWG.	40020	DATE CREATED:	7-14-05 BAP
REV. DATE:			

COPYRIGHT 2005
E.F.Bavis & Assoc. Inc.

FASTENER INSTALLATION DETAIL: SILL, WOOD WALL, FIELD VERIFIED

WOOD FRAMED OPENING MUST BE DESIGNED TO RESIST A LATERAL LOAD OF 102 LB/FT PERPENDICULAR TO THE FACE OF WALL IN ORDER TO RESIST A DESIGN PRESSURE OF 75 PSF

WOOD STUD FRAMING SHALL BE DESIGNED IN ACCORDANCE WITH FBC

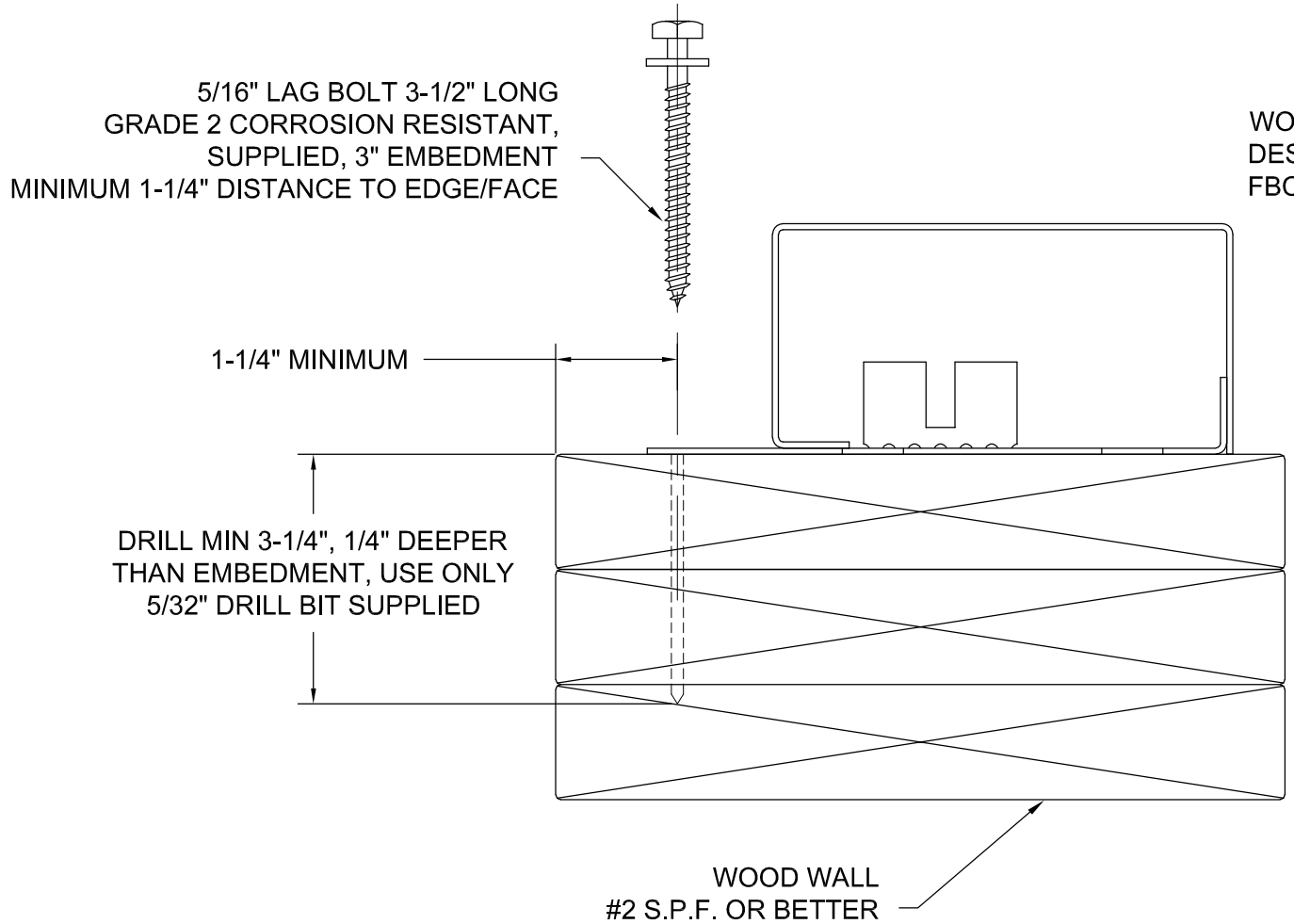

E.F.BAVIS & ASSOC. INC.
201 GRANDIN RD. P.O.BOX 337
MAINEVILLE, OH. 45039 0337
PH 513-677-0500 FAX 513-677-0552

UNLESS OTHERWISE SPECIFIED ALL DIMENSIONS ARE IN INCHES
DECIMALS: .XX + - .01 ; .XXX + - .005 FRACTIONS: + - 1/32; ANGLES: + - 30'
REMOVE ALL BURRS AND SHARP EDGES TO R .02 OR .02 X .02 CHAMFER MAX.

THIS DOCUMENTATION AND INFORMATION CONTAINED ARE THE SOLE PROPERTY OF E.F.BAVIS & ASSOC, INC. IT SHALL BE RETURNED UPON REQUEST AND SHALL NOT BE REPRODUCED IN WHOLE OR IN PART, OR DISCLOSED TO ANYONE ELSE, OR USED, WITHOUT WRITTEN CONSENT OF E.F.BAVIS & ASSOC, INC.

10' FIXED TRIMLESS WINDOW

MODEL	12103997	PAGE	17 OF 17
DWG.	40020	DATE CREATED:	7-14-05 BAP
REV. DATE:	06/27/08	MJC	COPYRIGHT 2005 E.F.Bavis & Assoc. Inc.
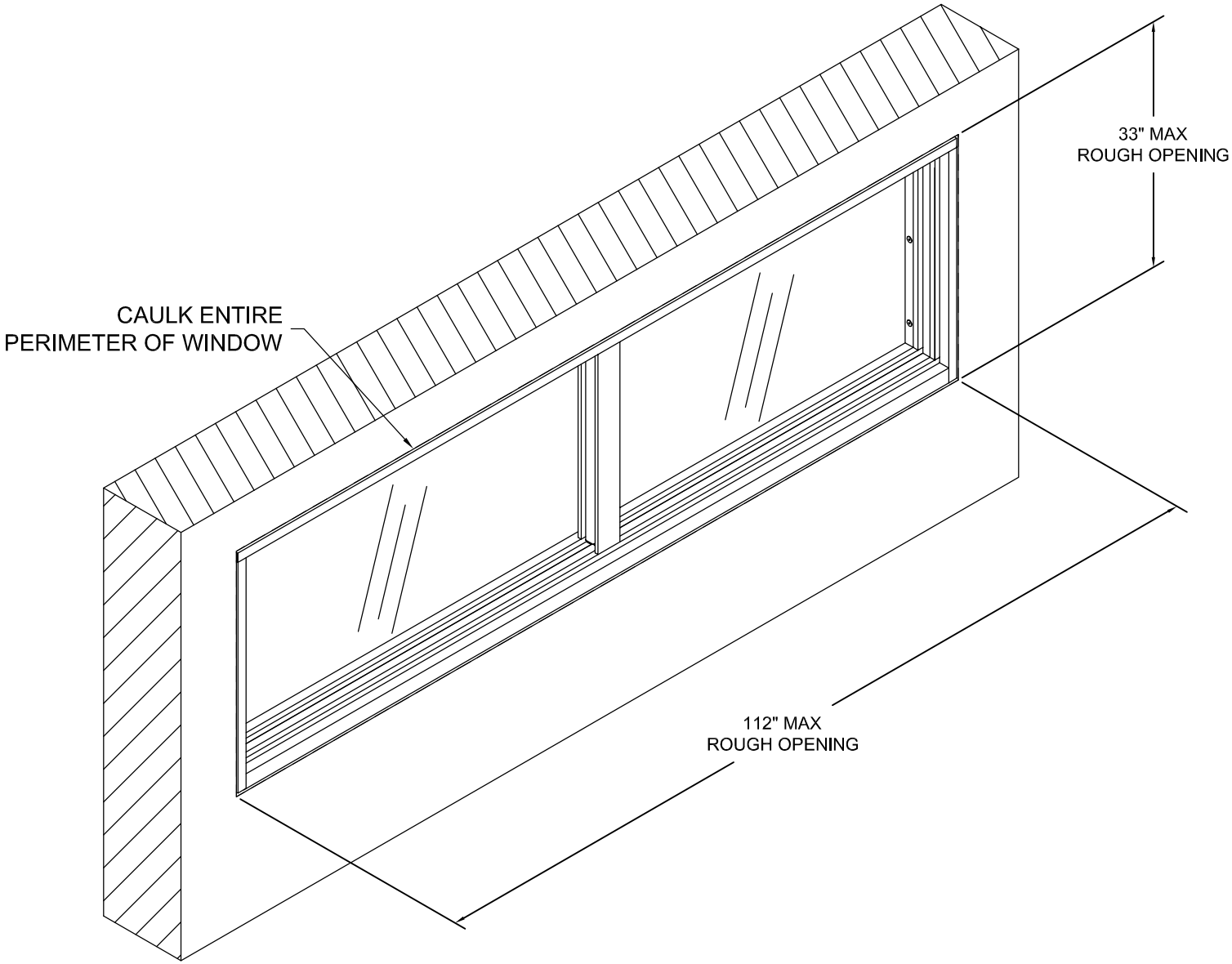
FINISH CAULKING, FIELD VERIFIED